THIS DRAWING IS UNPUBLISHED. RELEASED FOR PUBLICATION 20
© COPYRIGHT 20 BY TYCO ELECTRONICS CORPORATION. ALL RIGHTS RESERVED.

PART NUMBER	REV	FIRST USED	POWER UNIT	FEED TYPE	DESCRIPTION
1852304-1	B	122500-1	LEADMAKER	AIR FEED	CUTS CARRIER
1852304-2	B	565435-5	BENCH MODEL K	AIR FEED	CUTS CARRIER
1852304-3	B	354500-1	BENCH MODEL G	AIR FEED	CUTS CARRIER
1852304-6	B	122500-1	LEADMAKER	AIR FEED	CONTINUOUS CARRIER
7-1852304-7	B	-	-	-	SPARE PARTS

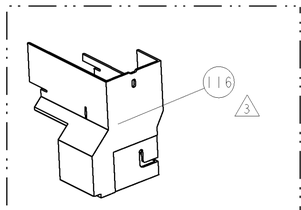

AMP-O-LECTRIC TERM GUARD

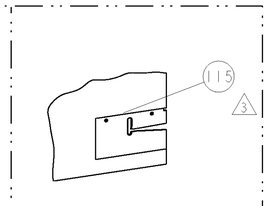

G TERMINATOR GUARD

TERMINAL NAME: W2 POWER CONTACT					
TYCO PN	-	AMP TERMINAL - AMP CRIMP SPECS REF			
1732094-2	-				
-	-	PAD LTR	CRIMP HEIGHT		WIRE SIZE
-	-	A	1.55±0.05mm[.061±.002]		2(18)
-	-	B	1.39±0.05mm[.053±.002]		16 OR 2(20)
-	-	C	-		-
-	-	D	-		-
-	-	CRIMP	SIZE	TYPE	RANGE
-	-				
-	-	WIRE	2.29mm [.090]	F	2(18)-1(16)
-	-	INSUL	-	-	-
WIRE STRIP LENGTH 2.03mm-2.41mm	TERM APPL SPEC 114-13013	FEED 24.99mm	APPL INSTRUCTIONS 408-8040	SET UP GAGE 458637-1	

LOC	DIST
A	66

REVISIONS

P	LTR	DESCRIPTION	DATE	DWN	APVD
	A	RELEASED	01NOV2006	BH	BH
	B	ECR-07-011108	11MAY2007	MY	TE

1. RECOMMENDED SPARE PARTS
2. GREASE LIGHTLY
3. GUARD MUST BE IN PLACE WHEN OPERATING APPLICATOR IN A BENCH MACHINE

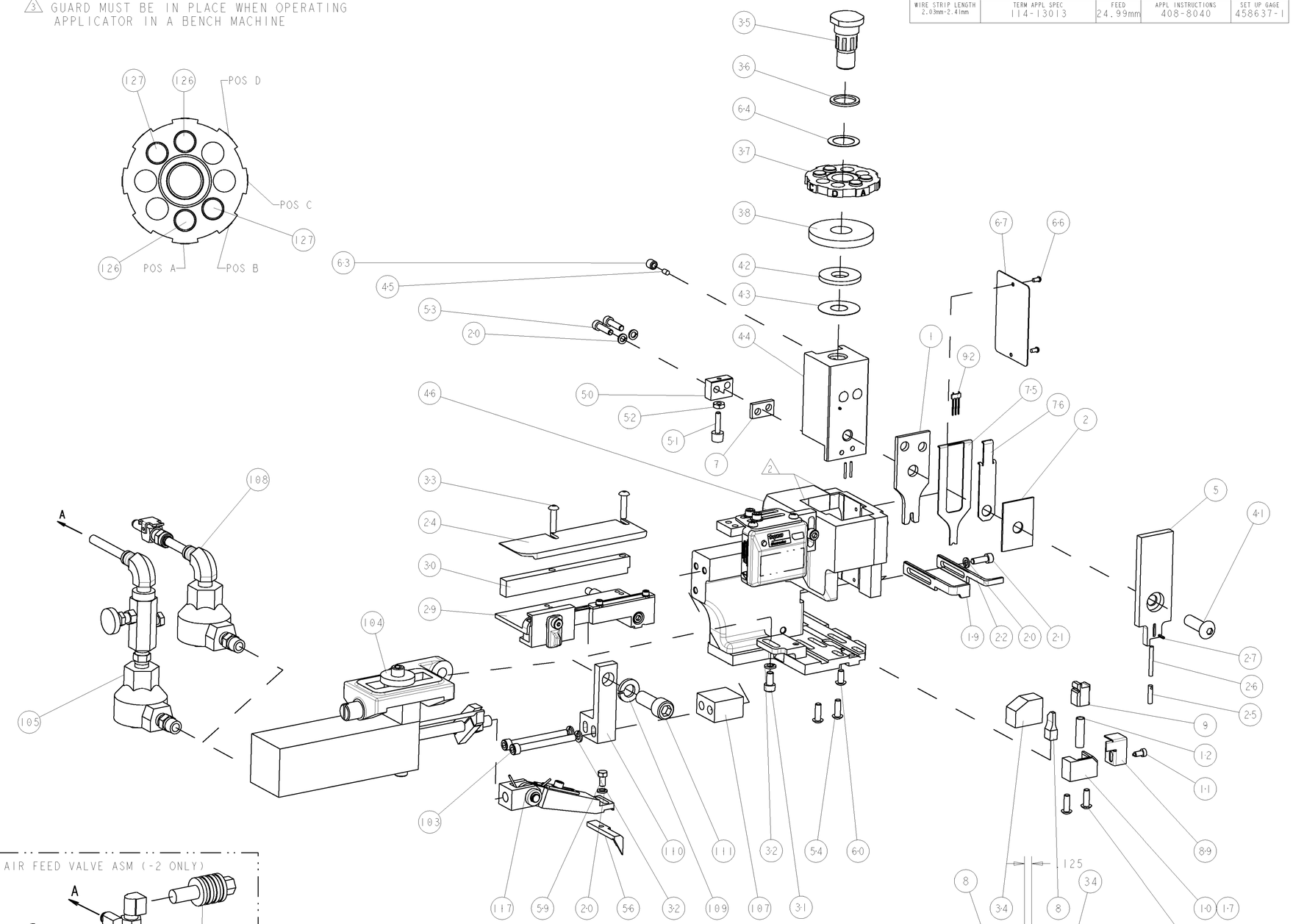

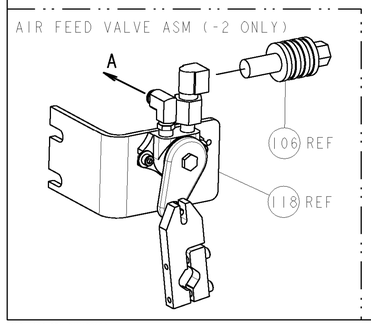

-77	-6	-3	-2	-1	U/M	PART NO	DESCRIPTION	ITEM NO
-	2	2	2	2	-	2-354779-5	PIN, WIRE DISC, .3115	127
-	2	2	2	2	-	354779-7	PIN, WIRE DISC, .3025	126
-	-	-	REF	-	-	692655-6	AIR FEED VALVE ASSEMBLY	118
-	1	1	1	1	-	461062-1	FEED FINGER ASSEMBLY	117
3 -	-	-	REF	-	..	455749-1	GUARD WINDOW	116
3 -	-	REF	-	-	..	679532-1	INSERT, GUARD	115
-	1	1	1	1	-	3-21001-5	SCR, SKT HD CAP 3/8-16 X 1.000	111
-	1	1	1	1	-	459610-3	MOUNT, FEED BRACKET	110
-	1	1	1	1	-	21024-8	WASHER, SPRG LOCK, REG 3/8	109
-	1	1	-	1	-	692655-7	AIR FEED VALVE ASSEMBLY	108
-	1	1	1	1	-	461690-1	SPACER, AIR FEED	107
-	-	-	REF	-	-	24024-2	VALVE, SHUT OFF	106
-	-	-	1	-	-	692655-5	AIR FEED VALVE ASSEMBLY	105
-	1	1	1	1	-	461065-2	ASSEMBLY, AIR FEED	104
-	2	2	2	2	-	4-21000-3	SCR, SKT HD CAP 10-32 X 2.000	103
-	1	1	1	1	-	1424350-1	HOLDER, PIN, WIRED	92
-	1	1	1	1	-	318563-1	GUARD, FRONT CHIP	89
-	1	1	1	1	-	1490524-2	DEPRESSOR, SPACER	76
-	1	1	1	1	-	1490525-1	DEPRESSOR, WIRE	75
-	1	1	1	1	-	4088040	SF APPL INST 408-8040	72
-	1	1	1	1	-	217238-1	GENERAL INSTRUCTION PKG	71
-	2	2	2	2	-	2-23147-2	SPRING, COMPRESSION	70
-	1	1	1	1	-	461264-1	PLATE, IDENTIFICATION	67
-	2	2	2	2	-	21017-2	SCREW, DRIVE	66
-	1	1	1	1	-	986950-1	WASHER, FLAT PRECISION	64
-	1	1	1	1	-	21009-2	SCR, SET, SELF LOCKING 1/4-20 X .250	63
-	1	1	1	1	-	22733-8	SCR, BHSC, SELF-LOCKING, 8-32 X .375	60
-	1	1	1	1	-	2-22603-0	SCR, HEX HD CAP 8-32 X .312	59
-	1	1	1	1	-	2-694433-6	FEED PAWL	56
-	4	4	4	4	-	2-21002-2	SCR, BTN SKT HD CAP 8-32 X .500	54
-	2	2	2	2	-	2-21000-8	SCR, SKT HD CAP 8-32 X .625	53
-	1	1	1	1	-	21018-5	NUT, HEX, REG 6-32	52
-	1	1	1	1	-	811242-2	BUMPER, HOLD DOWN	51
-	1	1	1	1	-	690753-1	SPACER, TONKER	50
-	1	1	1	1	-	1633399-1	APPL., BASIC AIR FEED SUB ASSY	46
-	1	1	1	1	-	690191-1	PLUG,NYLON	45
-	1	1	1	1	-	455673-1	RAM, SIDE FEED	44
-	1	1	1	1	-	690125-1	SHIM SUB-ASSY	43
-	1	1	1	1	-	690124-1	WASHER, RAM (.115)	42
-	1	1	1	1	-	7-21002-9	SCR, BTN SKT HD CAP 5/16-24 X 1.00	41
-	1	1	1	1	-	690223-1	SPACER, INS.	38
-	1	1	1	1	-	354777-1	WIRE DISC, ASSEMBLY	37
-	1	1	1	1	-	22480-5	SPRING, COMPRESSION	36
-	1	1	1	1	-	690212-1	POST, RAM	35
-	1	1	1	1	-	690786-3	TERMINAL SUPPORT	34
-	2	2	2	2	-	2-21002-4	SCR, BTN SKT HD CAP 8-32 X .750	33
-	3	3	3	3	-	21024-5	WASHER, SPRG LOCK, REG NO 10	32
-	1	1	1	1	-	3-21000-4	SCR, SKT HD CAP 10-32 X .375	31
-	1	1	1	1	-	1320908-1	SPACER, STRIP GUIDE	30
-	1	1	1	1	-	1633091-1	ASSEMBLY, STRIP GUIDE	29
-	1	1	1	1	-	21028-2	PIN, SLOTTED SPRING .062 X .250	27
-	1	1	1	1	-	5-547505-2	SPRING, COMPRESSION	26
-	1	1	1	1	-	854769-1	HOLDER, INS	25
-	1	1	1	1	-	1320928-1	PLATE, STRIP GUIDE	24
-	1	-	-	1	-	690472-2	STRIPPER	22
-	1	1	1	1	-	2-21000-7	SCR, SKT HD CAP 8-32 X .500	21
-	4	4	4	4	-	21024-4	WASHER, SPRG LOCK, REG NO 8	20
-	-	1	1	-	-	691353-1	STRIPPER	19
1 -	1	-	-	-	-	679625-3	SHEAR HOLDER, FRONT (NO CUT)	17
-	1	1	1	1	-	3-22280-3	SPRING, COMPRESSION	12
-	1	1	1	1	-	1-690461-6	STOP, SHEAR	11
1 -	-	1	1	1	-	1-690459-3	SHEAR HOLDER, FRONT	10
1 -	1	1	1	1	-	2-454276-6	FLOATING SHEAR, FRONT	9
1 1	1	1	1	1	-	7-1633117-6	ANVIL, COMBINATION	8
-	1	1	1	1	-	5-240641-2	SPACER	7
-	1	1	1	1	-	854772-1	DEPRESSOR, SHEAR	5
-	1	1	1	1	-	1-455888-0	SPACER, CRIMPER	2
1 1	1	1	1	1	-	4-456406-7	CRIMPER, WIRE PREMIUM	1

THIS DRAWING IS CONFIDENTIAL DOCUMENT OF TYCO ELECTRONICS CORPORATION IT IS SUBMITTED TO CUSTOMER WITH THE UNDERSTANDING THAT THE ORGANIZATION SHOULD BE CONTACTED FOR THE LATEST REVISION.

DIMENSIONS: INCHES

TOLERANCES UNLESS OTHERWISE SPECIFIED:
0 PLC ±-
1 PLC ±0.1
2 PLC ±0.01
3 PLC ±0.001
4 PLC ±0.0001
ANGLES ±-

MATERIAL -
FINISH -

DWN	B.HIGMAN	13JUL2006
CHK	B.HIGMAN	13JUL2006
APVD	T.ELBIN	13JUL2006

PRODUCT SPEC -
APPLICATION SPEC -
WEIGHT -

tyco Electronics — Tyco Electronics, Harrisburg, PA 17105-3608

NAME: SIDE FEED HDM APPLICATOR

SIZE	CAGE CODE	DRAWING NO	RESTRICTED TO
A1	00779	C-1852304	-

CUSTOMER DRAWING — SCALE 3:5 — SHEET 1 OF 1 — REV B

CUSTOMER VIEWABLE ASSEMBLY

AMP 4805 REV 31MAR2000