Alle Rechte vorbehalten/ *All rights reserved*

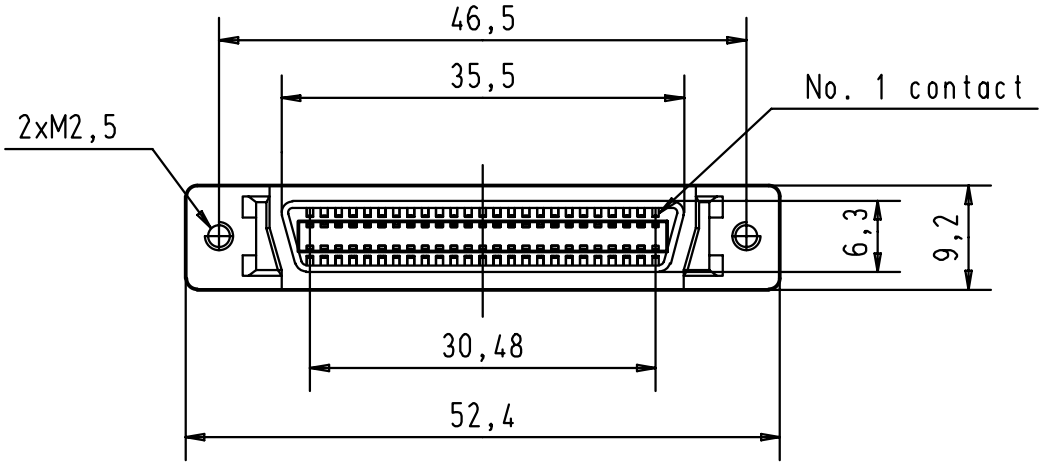

Printed board layout
Component side

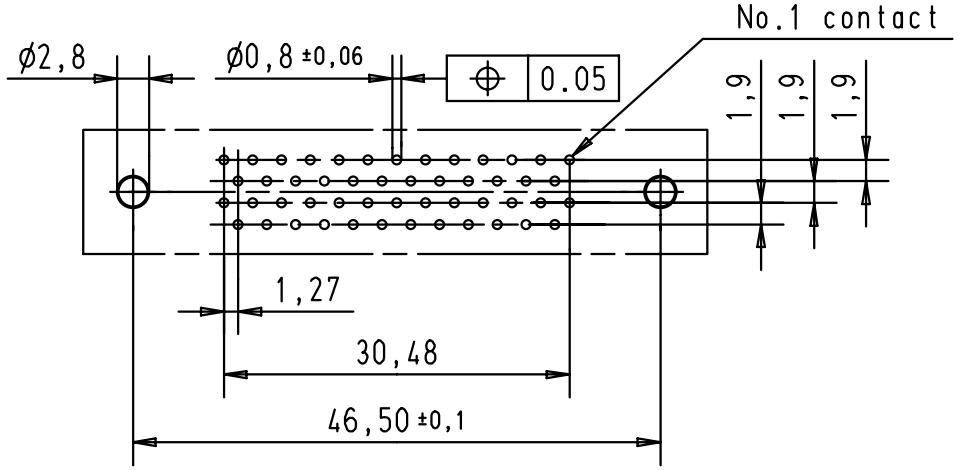

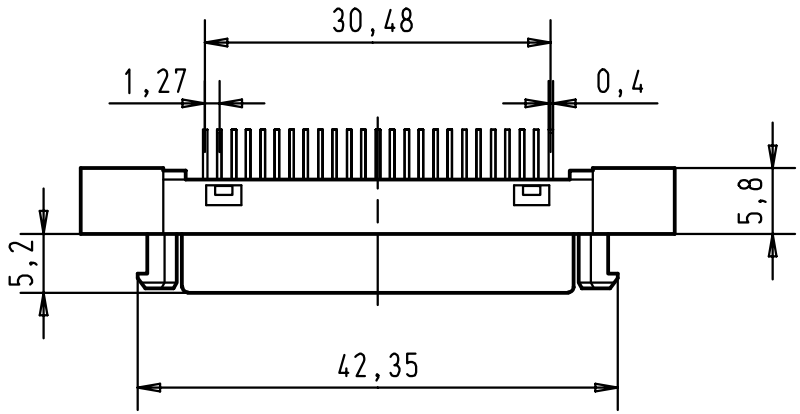

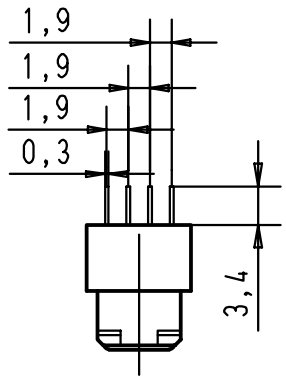

				Dat.	Name
			Detail.	21 JUN 01	S G
			Insp.		
			Stand.		
27686	21 JUN 01	S G			
Mod.	Dat.	Name			

All Dim. in mm
Orig. Size DIN A 4

HARTING EURL
F-95972 Paris

har.mik ®
I/O bellow
50 poles female connector
with straight solder pins
and fixed latching

TB 60 11 050 5102

Sub.

Maßstab/ *Scale*
1,5:1

Blatt/ *Page*
1/1